323302

12425

03 Hours / 70 Marks Seat No. | | | | | | | | |

Instructions –

(1) All Questions are *Compulsory.*

(2) Answer each next main Question on a new page.

(3) Illustrate your answers with neat sketches wherever necessary.

(4) Figures to the right indicate full marks.

(5) Assume suitable data, if necessary.

(6) Use of Non-programmable Electronic Pocket Calculator is permissible.

(7) Mobile Phone, Pager and any other Electronic Communication devices are not permissible in Examination Hall.

Marks

1. Attempt any FIVE of the following : 10

a) Define moment of Inertia.

b) Explain any two characteristics of force.

c) Write down any two assumptions in the truss.

d) State formula for position of centroid in semi circular plate. Show in sketch.

e) Define point of zero shear.

f) State Lami's theorem.

g) What are the short and long column?

Marks

2. Attempt any THREE of the following : 12

a) State and explain Varignon's theorem.

b) Draw the following beams and explain weather statically determinate or indeterminate w.r.t. to reactions they offer

i) A fixed beam

ii) An overhanging beam

c) State and draw sketches of any four trusses used in Industrial buildings.

d) State the theorem of parallel axis w.r.t. moment of Inertia and explain with a sketch it's application.

3. Attempt any THREE of the following : 12

a) Explain with sketch the middle third rule.

b) Explain perfect and imperfect frame with sketches.

c) Define a force system and explain two different systems of forces.

d) Draw a simple supported Beam of span 'l' an eccentric point load 'w' and draw it's S.F.D. and B.M.D. Showing important values.

4. Attempt any THREE of the following: 12

a) Define Radius of Gyration and write down the formula for radius of gyration of a rectangle for both centroidal axis.

b) Draw a cantilever beam of span 'l' and an end point load 'w' and draw S.F.D. and B.M.D. showing important values.

c) Three forces A,B,C keeps body in equilibrium angle between A and B is 80º, A and C is 130º. Calculate force A and B if C = 100 kN.

Marks

d) A steel rod of 5.5 m long and having 4.5 cm diameter is used as a column with one end fixed and other free. Determine crippling load. $E = 2 \times 10^5$ MPa.

e) Determine the forces in the member AB and BC only. Use any method. Fig. No. 1

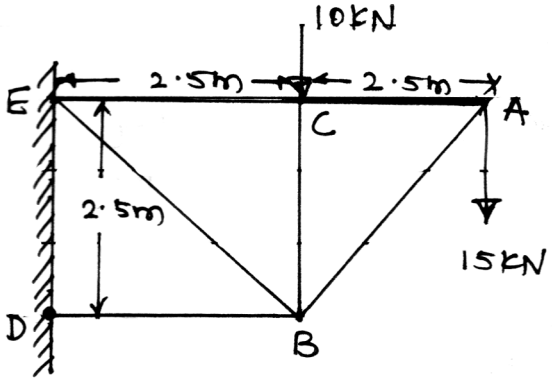

Fig. No. 1

5. Attempt any TWO of the following: **12**

a) Find Analytically the resultant of the concurrent from shown in Fig. No. 2.

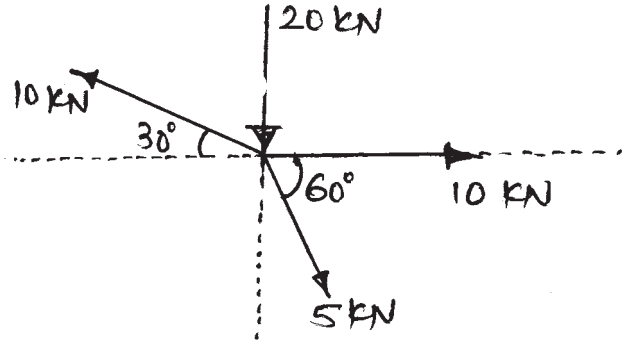

Fig. No. 2

Marks

b) Calculate the reaction at support for the given Beam. Fig. No. 3

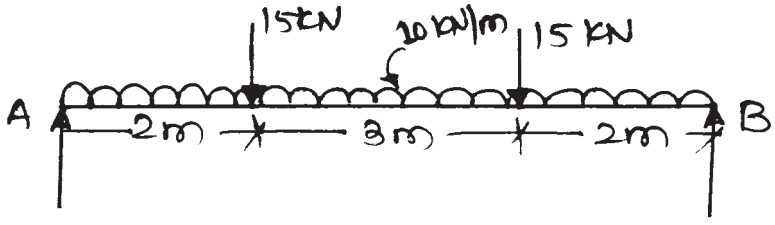

Fig. No. 3

c) Find centroid of Gravity of the following shape and moment of Inertia about centroidal axis. Fig. No. 4

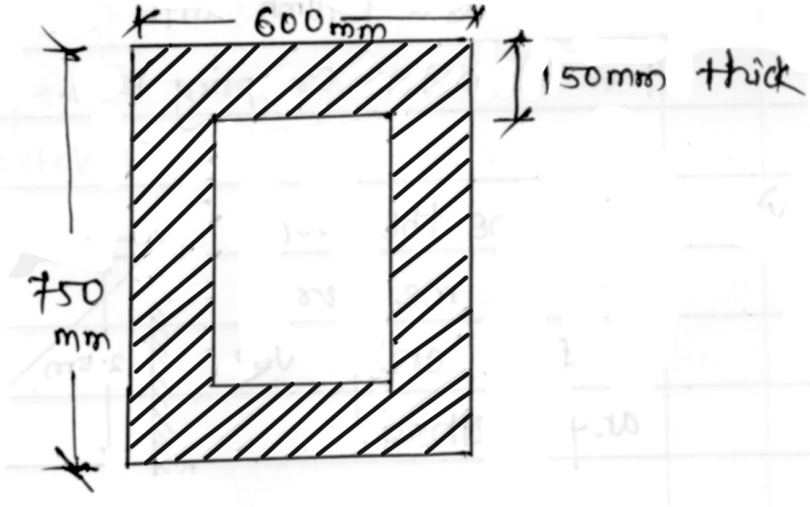

Fig. No. 4

6. Attempt any TWO of the following: **12**

a) Find reactions for the following Beam and Draw S.F.D. and B.M.D. Fig. No. 5

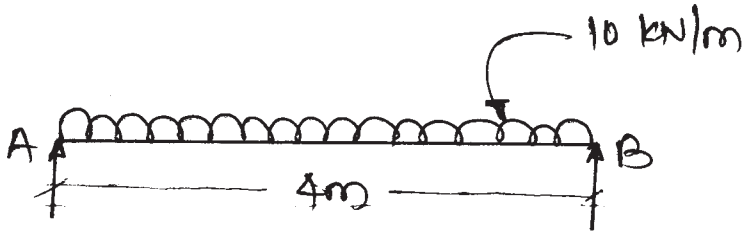

Fig. No. 5

Marks

b) Calculate the forces in member AC, AF, CF and FG. Fig. No. 6

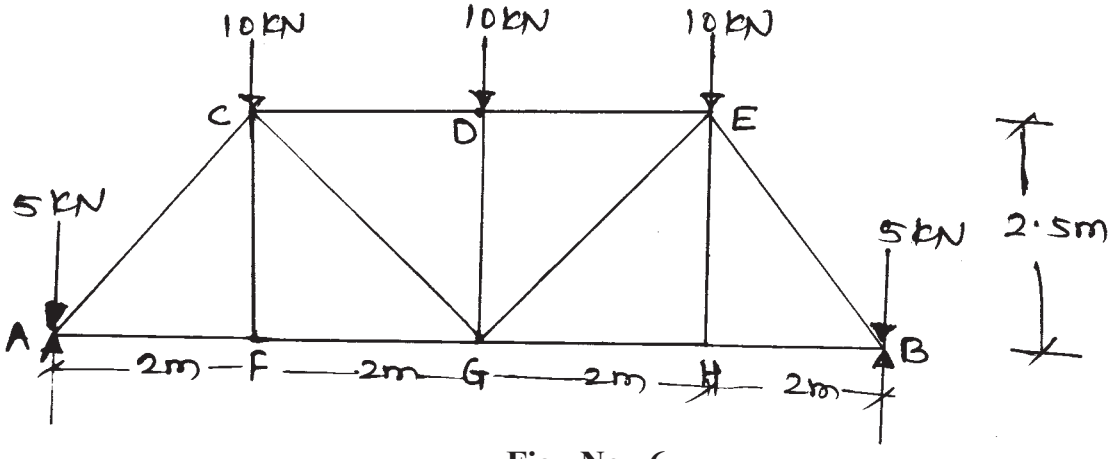

Fig. No. 6

c) Find stresses at all four corners of the column show below. Draw stress diagram across all four sides. Load is of 600 kN at a distance of 100 mm from yy-axis on xx-axis. Fig. No. 7

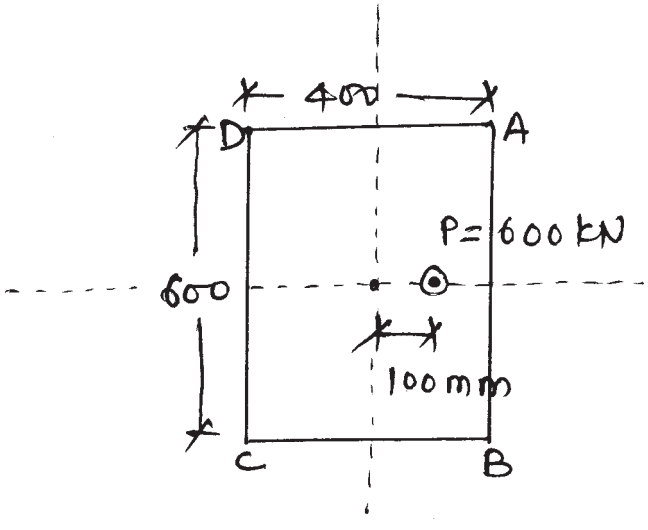

Fig. No. 7